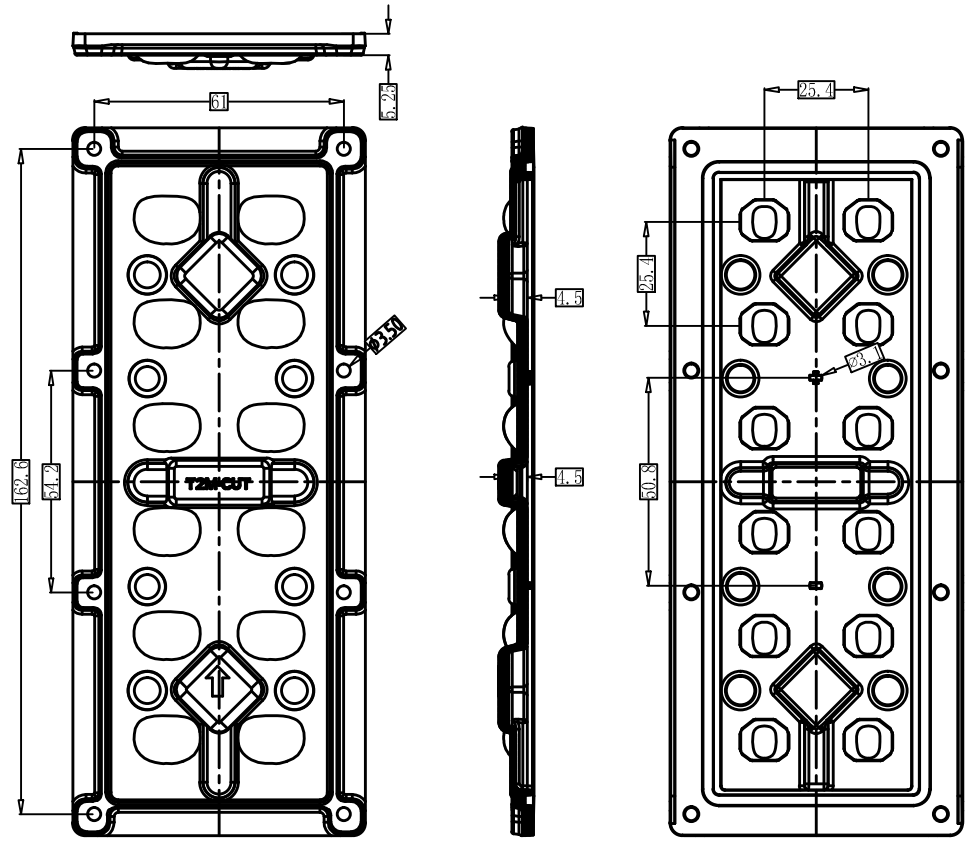

NOTE:
1. ALL SURFACES NO SHRINKAGE, BURRS, JUNCTION LINES ALLOWED
2. CRITICAL DIMENSIONS ARE INDICATED ON THE DRAWING
3. ALL INDICATED SURFACES ARE POLISHED, THE OPTICAL SURFACE POLISHING MUST BE SPI-A1 STANDARD
4. THE PARTS IS COMPLIANT TO ROHS AND REACH STANDARD

PCB Thickness 1.6mm

TYPE: 173-M125050T2M-CUT | Angle: T2M-CUTOFF

CHANGE						PART						
						0 ~ 10	±0.05	顏色 COLOR	Transparency	SCALE	1:1	TOSHIRR OPTICS CO;LTD
						10 ~ 20	±0.10	材質 MATERIAL	PMMA	UNIT	mm	
	A/0	2022-8-12	NEW	——	——	20 ~ 30	±0.15	設計 DESIGN	C.Y.CAI 2022-8-12	SIZE	A4	料號 PART NO.
						30 ~	±0.20					
						Angle	± 1°	核准 APPROVE		SHEET		品名 Product:
	版次 REV	日期 DATE	變更說明 MODIFICATION DESCRIPTION	變更 CHANGE	核准 APPROVE	DIM	TOL					