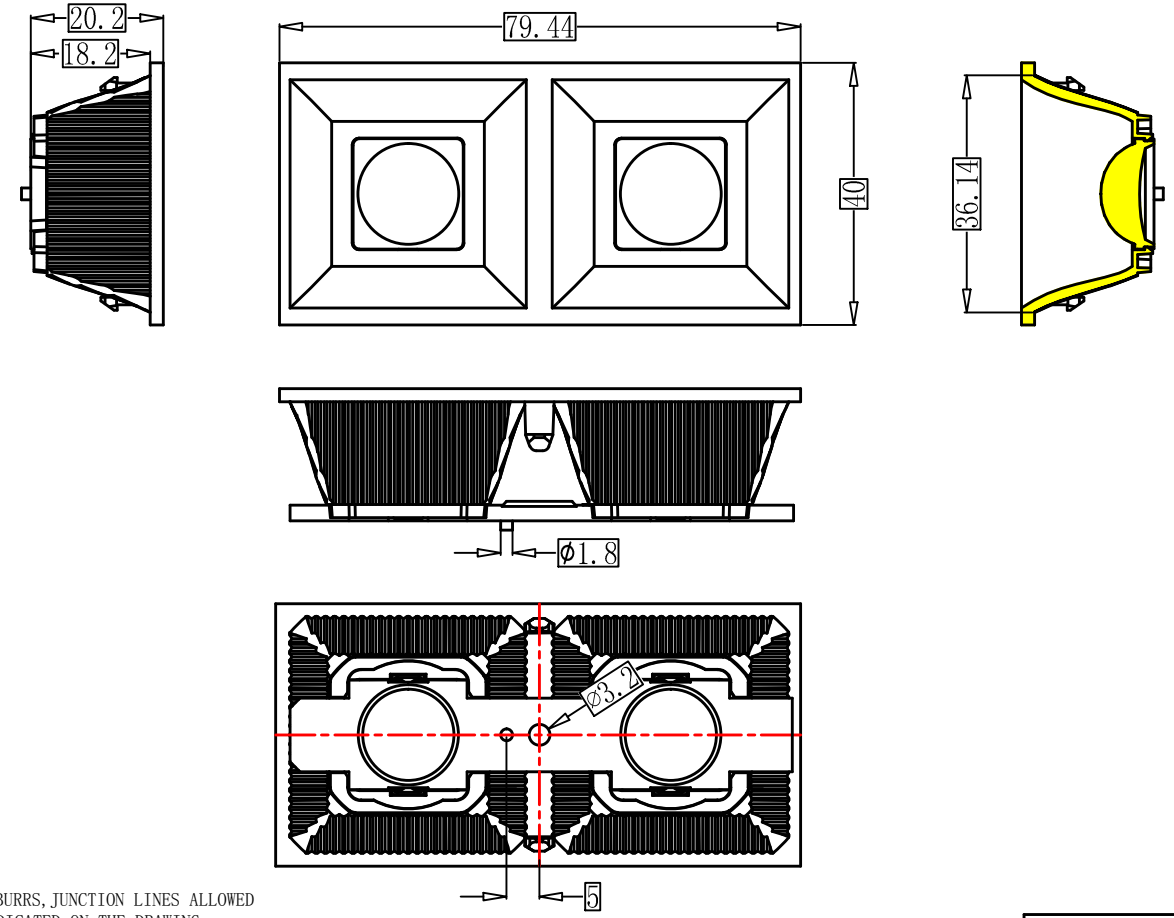

NOTE:
1. ALL SURFACES NO SHRINKAGE, BURRS, JUNCTION LINES ALLOWED
2. CRITICAL DIMENSIONS ARE INDICATED ON THE DRAWING
3. ALL INDICATED SURFACES ARE POLISHED, THE OPTICAL SURFACE POLISHING MUST BE SPI-A1 STANDARD
4. THE PARTS IS COMPLIANT TO ROHS AND REACH STANDARD

PCB Thickness 1.6mm

TYPE: RF40-A2A30L	Angle: 33°
TYPE: RF40-A2A3070L	Angle: 32*68°
TYPE: RF40-A2A80L	Angle: 80°
TYPE: RF40-A2A50L	Angle: 50°

CHANGE												
					PART 0 ~ 10	±0.05	顏色 COLOR	Transparency		SCALE	1:1	TOSHIRR OPTICS CO;LTD
					10 ~ 20	±0.10	材質 MATERIAL	PC-1250Z100		UNIT	mm	
					20 ~ 30	±0.15						
A/0	2019-8-12	NEW	——	——	30 ~	±0.20	設計 DESIGN	C.Y.CAI	2019-8-12	SIZE	A4	料號 PART NO. RF40-A2A50L
					Angle	± 1°						
版次 REV	日期 DATE	變更說明 MODIFICATION DESCRIPTION	變更 CHANGE	核准 APPROVE	DIM	TOL	核准 APPROVE			SHEET		品名 Product: